PROXIMA SYSTEMS HUB

TECHNICAL DATA SHEET

PRODUCT REF. **AH145.SLD**

Sliding Door Support

COMPATIBLE AIRCRAFT **H145**

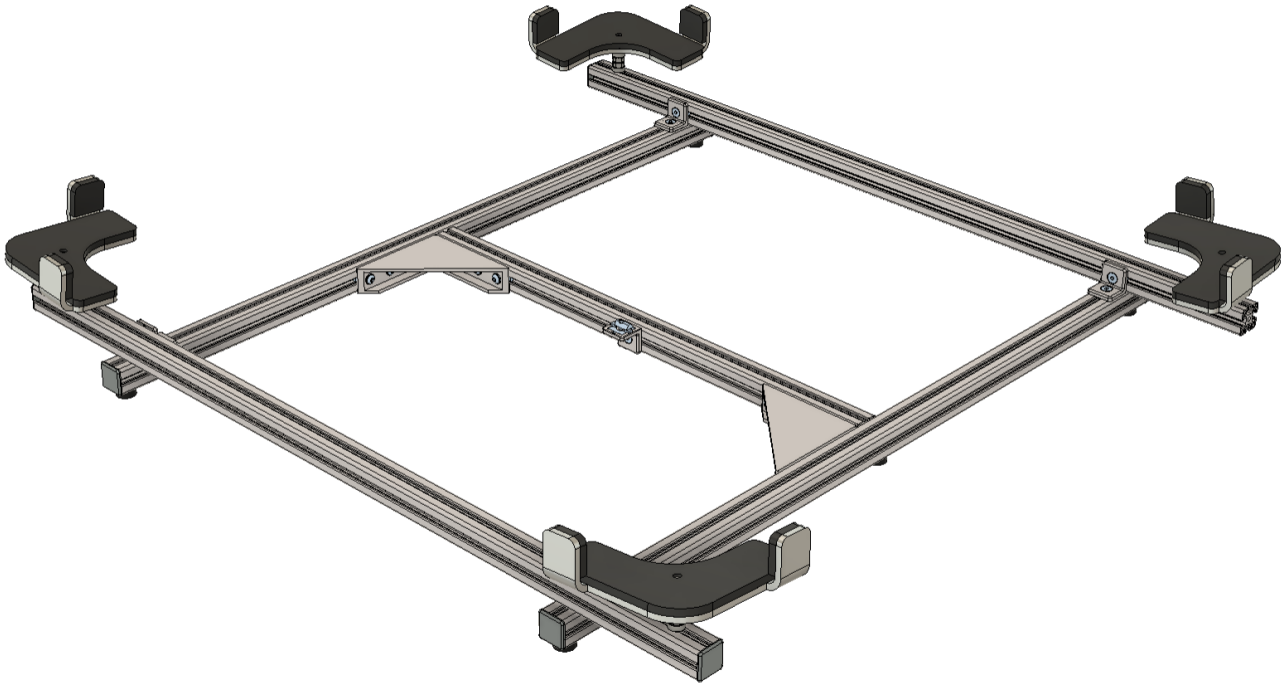

Horizontal support for sliding door maintenance

4-CORNER SUPPORT | WINDOW PROTECTION

© 2026 Proxima Systems Hub

Reproduction, representation and distribution prohibited without written authorization.

PROXIMA SYSTEMS HUB

TECHNICAL DESCRIPTION

OVERVIEW

This support is designed to hold a helicopter sliding door horizontally on a worktable during maintenance operations.

The door rests on four supports located at its corners, leaving the plexiglass window clear of the work surface.

This distribution of support points prevents direct contact between the window and the table and helps reduce the risk of deformation during maintenance.

KEY FEATURES

Horizontal positioning
on a worktable

Four support points
at the door corners

Window protection
plexiglass kept clear

Maintenance support
for sliding door work

TECHNICAL SPECIFICATIONS

APPLICATION	Sliding door maintenance
FUNCTION	Horizontal support on a table
SUPPORT	Four corner contact points
WINDOW	Plexiglass clear of the table
PROTECTION	Reduced loading on the window
USE	Support placed on a worktable
AIRCRAFT	H145

APPLICATION
Horizontal positioning and support of a sliding door during maintenance.

CONTACT / QUOTATIONS
contact@proximasystemshub.com

© 2026 Proxima Systems Hub
Reproduction, representation and distribution prohibited without written authorization.